Cale 104C Pay and Display Terminal Specification
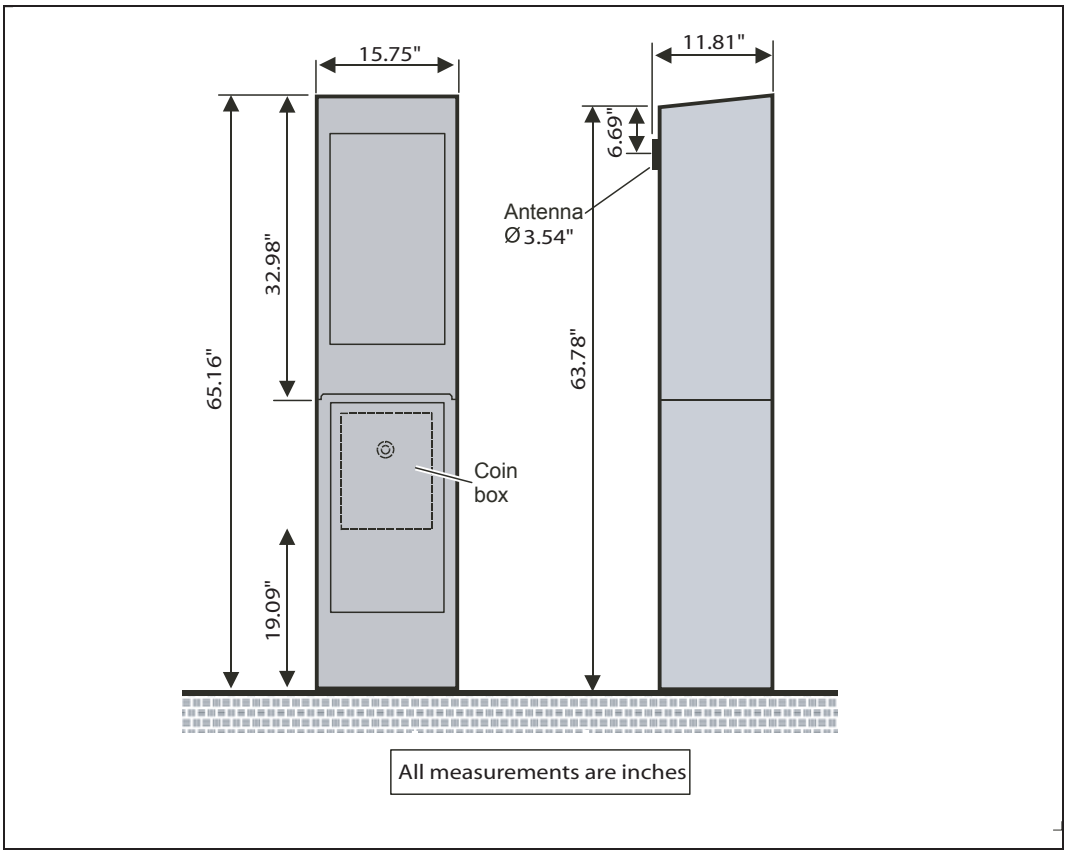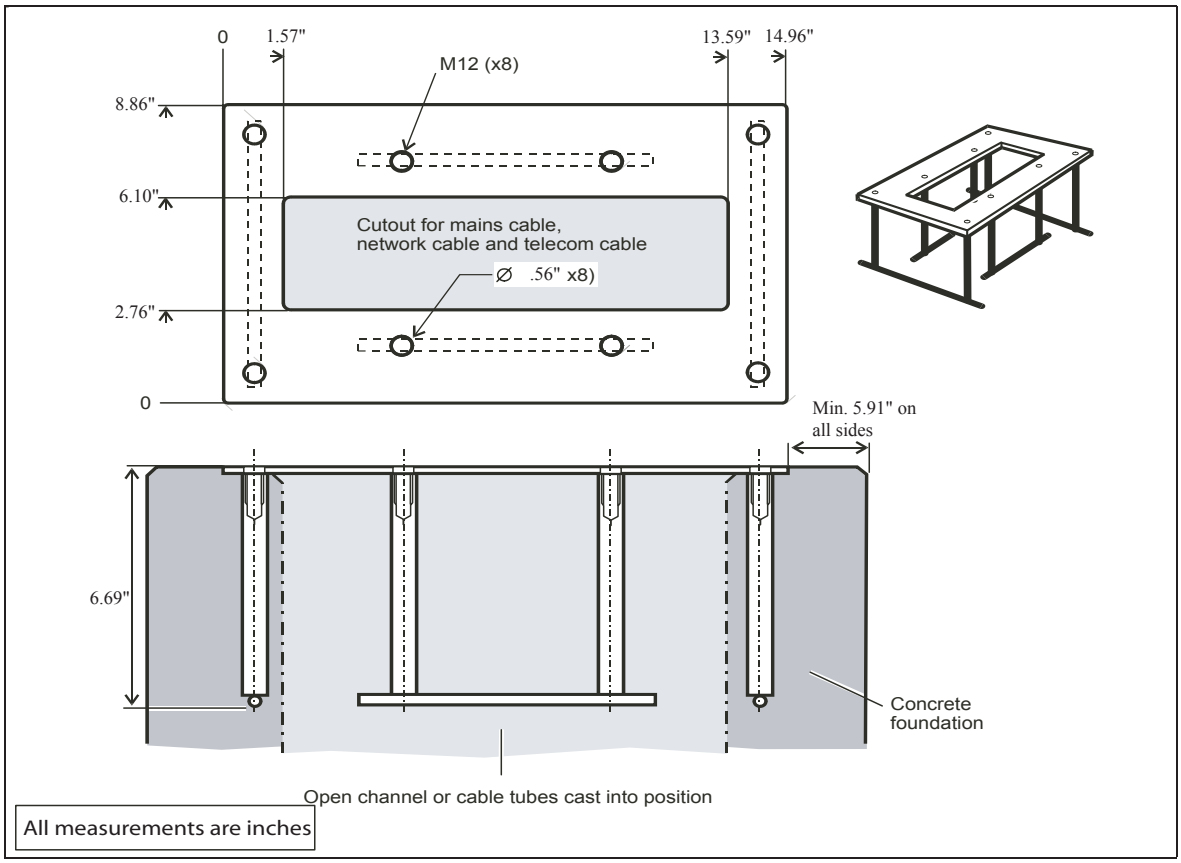
Total Parking Solutions, Inc.